Air-Powered Gearmotors

6AM Series, 20:1 reduction, 225 – 1550 lbs. in. (30 – 180 Nm) torque at 15 rpm (minimum speed reduction)

MODEL

6AM-22A-DB20

(8 Vanes, Reversible)

Net wt. for standard configuration 100 lbs. (45,0 kg)

FEATURES

- 20:1 gear reducer
- Base mounting
- Optional mountings and shaft locations available
- Muffler AC990 (not shown)

RECOMMENDED

- Filter AH106F
- Regulator AH107R
- Gauge AA806
- Lubricator AH108L
- Oil AD220 – 1 quart (.94 litres)
- Repair kit K281 (Air motor only)

OPTIONAL

- Muffler AL476 (for additional noise reduction)

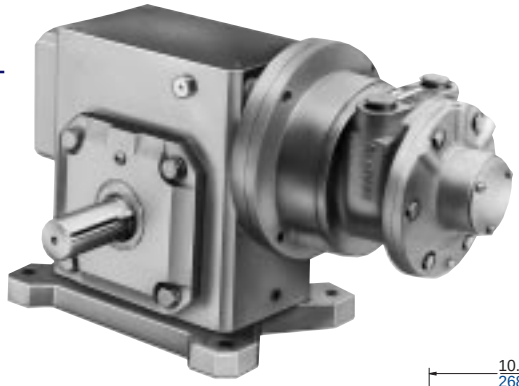

Max. allowable end thrust with 0 overhung load is 3552 lbs. (1598,4 kg) at 30 rpm to 2154 lbs. (969,3 kg) at 150 rpm. Max. overhung load on output shaft with 0 end thrust 2857 lbs. (1285,7 kg).

"B" Mounting (photo)

6AM-22A-DB20 (standard shaft) | *6AM-22A-DF20 (opposite shaft)

inches / mm

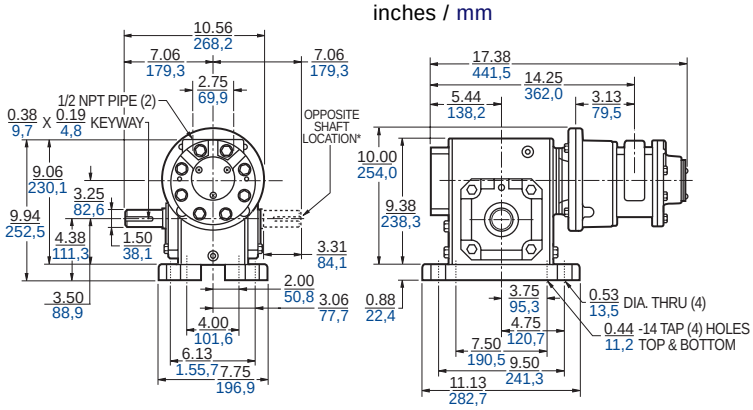

"C" Mounting

6AM-22A-DC20 (standard shaft) | *6AM-22A-DG20 (opposite shaft)

inches / mm

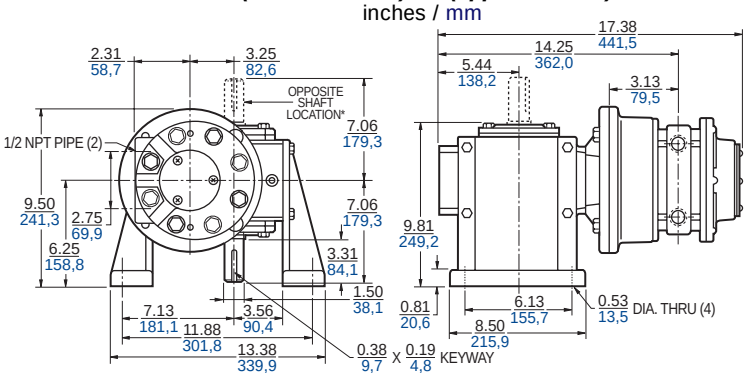

"D" Mounting

6AM-22A-DD20 (standard shaft) | *6AM-22A-DH20 (opposite shaft)

inches / mm

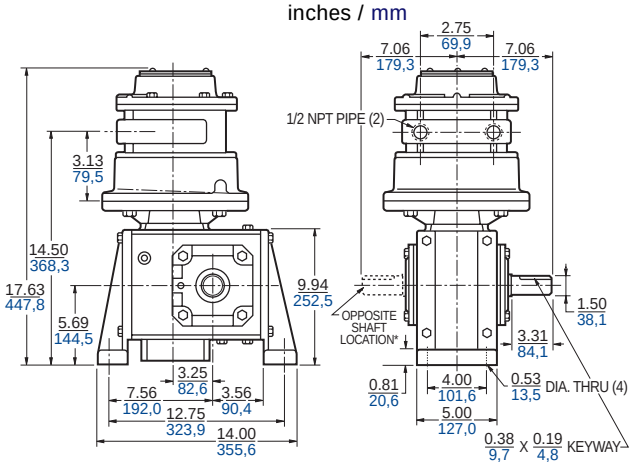

Output Power vs. Speed

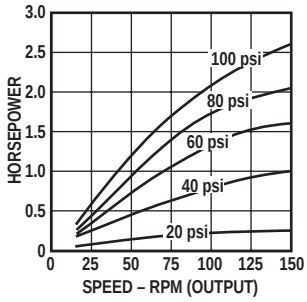

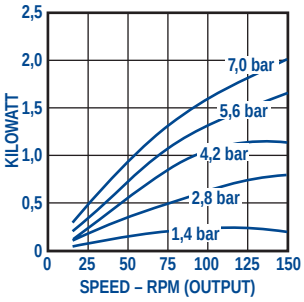

Torque vs. Speed

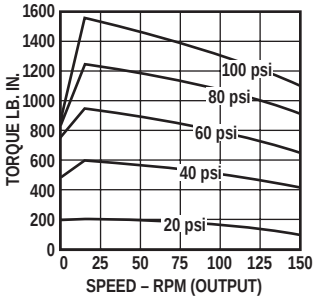

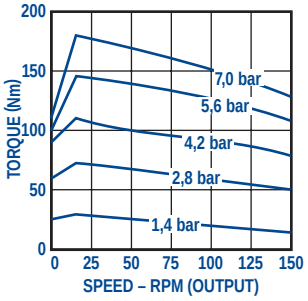
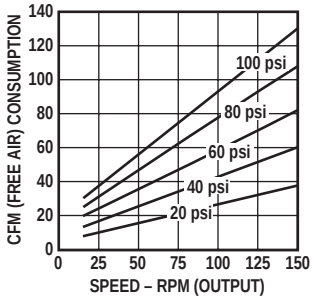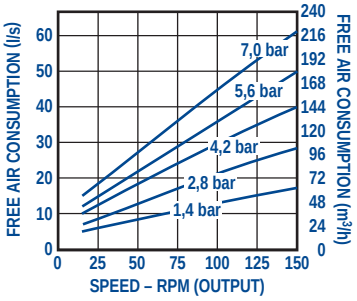
Air Consumption vs. Speed