PV SERIES
3/4 HP AIR MOTOR
SINGLE STAGE PLANETARY REDUCER

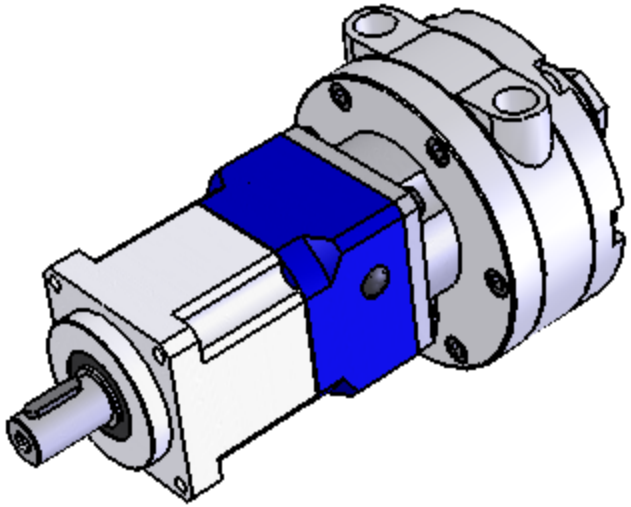

OUTPUT TORQUE

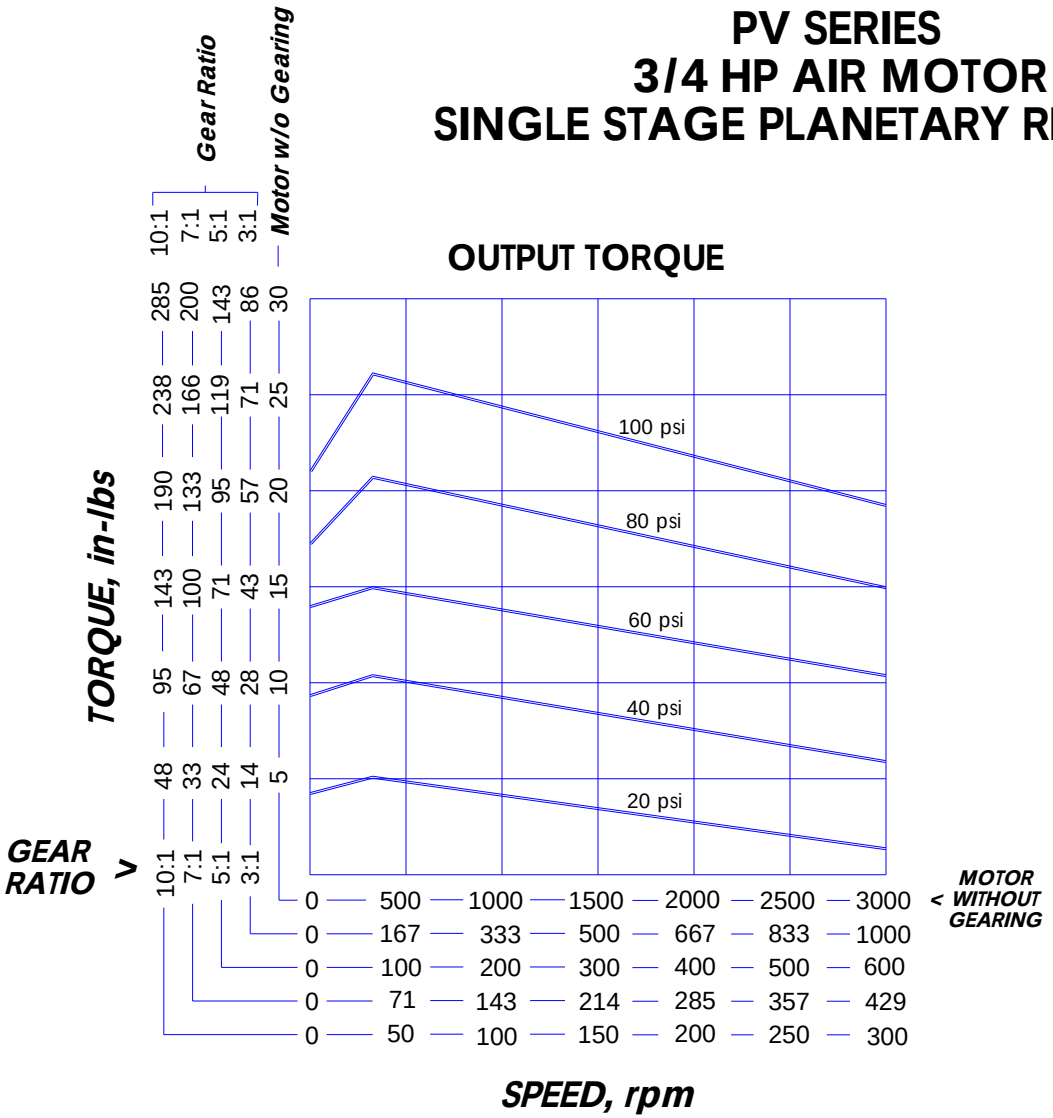

AIR CONSUMPTION

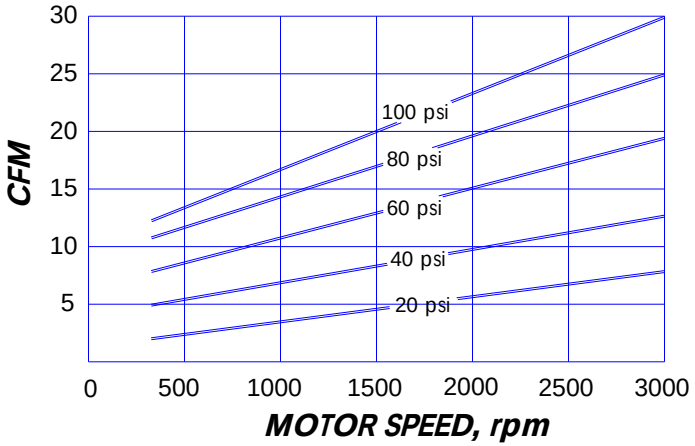

OUTPUT SHAFT LOADING & GEARMOTOR WEIGHT	SINGLE STAGE REDUCERS 3:1 - 10:1
APPROX. WEIGHT, lbs	**7.5**
MAX. RADIAL SHAFT LOAD, lbs	**315**
MAX. AXIAL SHAFT LOAD, lbs	**180**

>OPERATES IN ANY ORIENTATION
> LIFETIME REDUCER LUBRICATION
> MOTOR REQUIRES AIR LINE LUBRICATION

PV 3/4 HP 1-STAGE PERFORMANCE

DWG. NO. 149-105 REV 01

FERGUSONENGINEERING.COM (805) 461-3920