PV Series

1 1/2 HP, Single Stage
(Ratios: 3:1 - 10:1)

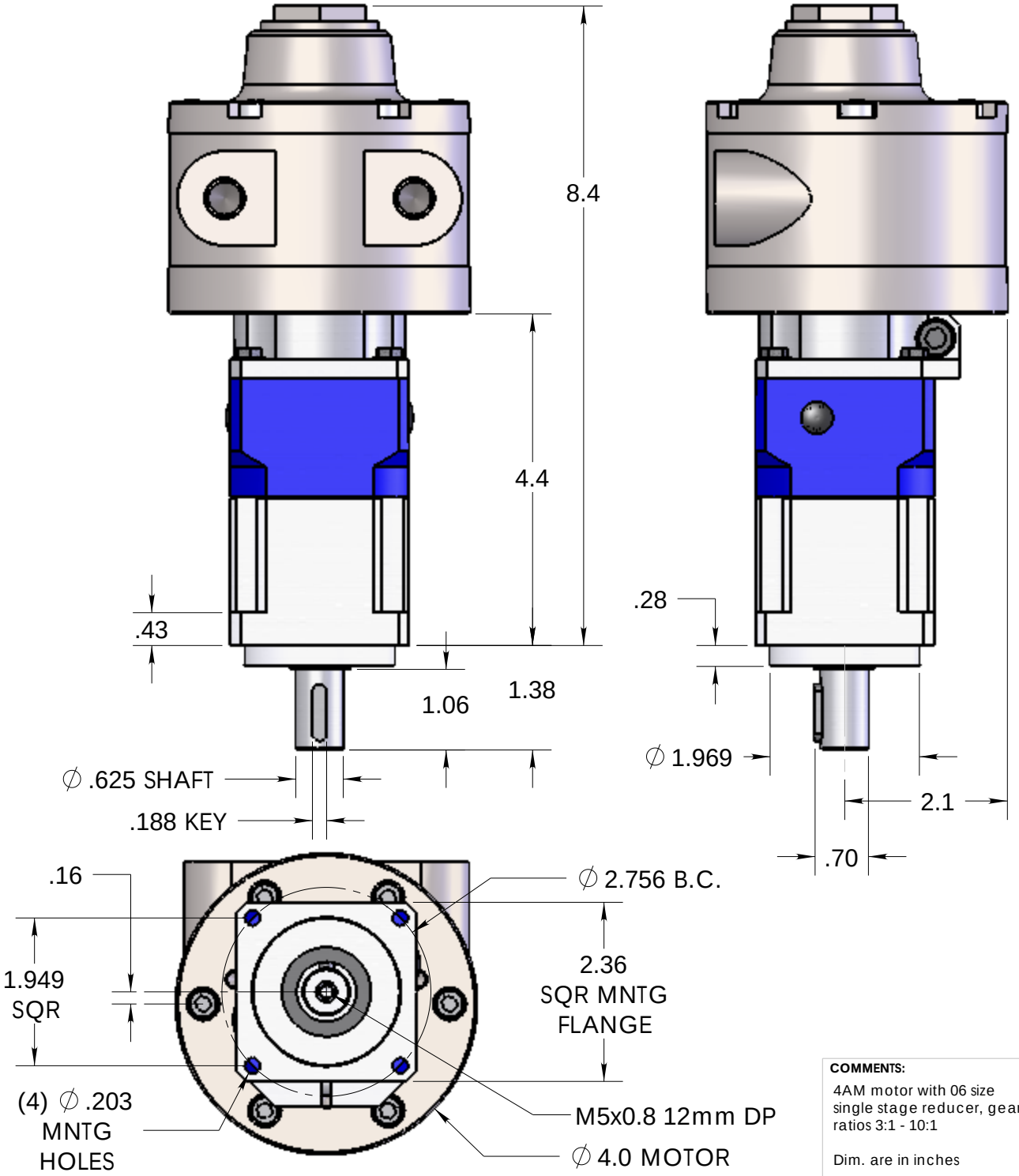

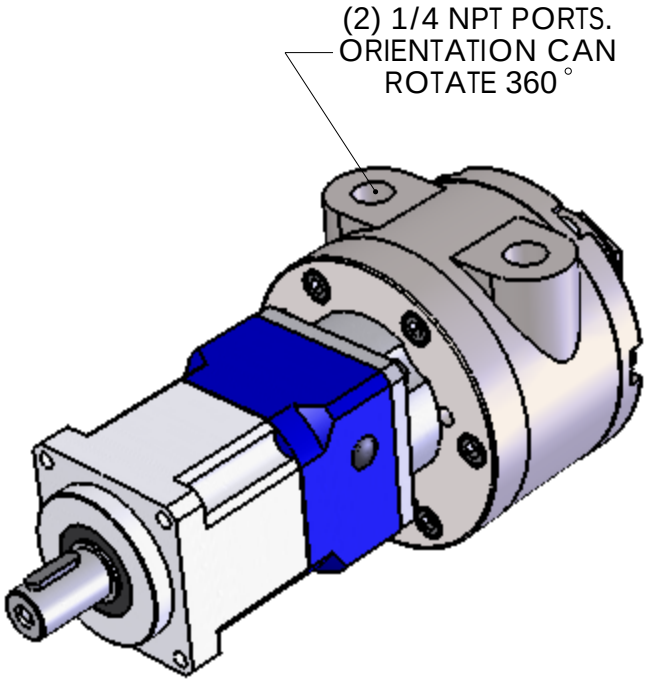

COMMENTS:
4AM motor with 06 size single stage reducer, gear ratios 3:1 - 10:1

Dim. are in inches

TITLE: 1 1/2 HP **PV Series** Gearmotors
(Single stage planetary reducer, ratios: 3:1 - 10:1)

DWG. NO. 149-002 REV 01

FergusonEngineering.com (805) 461-3920